Price: 25¢

PRACTICAL RADIO MATHEMATICS

By

M. N. BEITMAN

SUPREME PUBLICATIONS

SYMBOLS, ABBREVIATIONS

A.C.	Alternating current
A.F.	Audio frequency, sound vibrations
A.V.C.	Automatic volume control
C	Capacity of condensers
db	Decibel, a unit for measuring sound
D.C.	Direct current
FM	Frequency modulation
E	Voltage, electromotive force, EMF
HF	High frequency, short wave
Hy.	Henry, a unit of inductance of coils
I	Symbol for current
I.F.	Intermediate frequency in superhets
Kilo	Prefix meaning one thousand
ma.	milliamperes, thousands of an ampere
Meg	Prefix meaning one million
Micro	Prefix indicating one millionth part
Mil	Another prefix, meaning one thousandth
MU	Amplification factor of a radio tube
Ω	Ohms, measure of resistance
P.A.	Public Address, amplification system
R	Resistance, opposition to passage of electric current
RF	Radio frequency
RMS	Root mean square, used in A.C.
SG	Symbol for screen grid of a radio tube
Super	Superheterodyne, a type of radio circuit
SW	Short Wave
TRF	Tuned radio frequency, a radio circuit
W	Watts, measure of electrical power
X	Symbol for reactance, opposition to A.C.
Z	Impedance, total opposition to A.C.

COPYRIGHT, 1962

By SUPREME PUBLICATIONS
Highland Park, Illinois
(Warehouse and Branch Office in Chicago)

All rights reserved, including the right to reproduce or quote the contents of this book, or any portion thereof, in any form. Book reviews may include quotations of brief passages to illustrate the style or contents.

CHAPTER ONE

Mathematics of Radio

WHY MATHEMATICS? The work of radio engineering is accomplished with the aid of mathematics. Practical radio tasks can be performed without the aid of mathematics. But the knowledge of a few simple formulas and the most elementary mathematical operations will enable you to save time on many jobs and will eliminate trial and error attempts and guess work.

For example, if you wish to install a transmitting antenna, you may try various lengths until the best results are obtained. A more sensible method is to use the correct formula, substitute for the letters the known facts about the station transmitter, and solve for the exact size of antenna required.

Mathematical formulas are short-hand statements of facts about radio physics. A simple formula interconnects facts and permits you to find the value of one of the facts when the others are known. The actual facts, of course, are numerical quantities expressed in suitable units. We are going to assume that you have forgotten the mathematics you may have studied at school. We will begin with simple arithmetical problems and help you to grasp the mathematics you will need to be successful in doing practical radio work.

NUMBERS. There certainly is nothing hard about numbers. Since you have been a small child, you have been counting 1, 2, 3, 4, 5. Later at school you learned the multiplication tables. You learned that all numbers can be formed from the symbols, 1, 2, 3, 4, 5, 6, 7, 8, 9, and 0. The zero is important since it really enables us to write all numbers with only ten symbols. And you better remember that multiplying any number by zero, or multiplying zero by any number, results in zero.

FUNDAMENTAL OPERATIONS. There are four fundamental operations. You have used them in school and in every day business. One of these operations is *addition*. Addition means to combine items. Only similar items can be combined. If one radio set uses six (6) vacuum tubes and another employs five (5) tubes, by adding $(6 + 5 = 11)$ we learn that the two radios together require eleven tubes.

Subtraction means to take away, to remove one quantity from another. If you had a dozen machine bolts and used three in mounting a radio chassis, then you would have nine bolts left.

$$12 - 3 = 9$$

After your wages are computed, the amount for Old Age Pension is deducted (subtracted), and you receive the balance.

Multiplication is a process of continued addition. By memorizing tables, the work of multiplying is greatly simplified. Number 8 multiplied by number 6, is equivalent to adding number 8's six times. The symbol $\times$ stands for the multiplication operation. The statement

$$8 \times 6 = 48$$

is read: Eight times six is equal to forty-eight.

If two letters are written next to each other, but without a symbol between them, these letters are to be multiplied together. For example, fL means f multiplied by L. Sometimes a dot like this • also stands for multiplication.

Division is the inverse of multiplication. You read

$$24 \div 6 = 4$$

as: Twenty-four divided by six is equal to four.

This problem may also be stated as:

$$\frac{24}{6} = 4$$

Please notice that this means that the quantity above the long dash is to be divided by the number below the dash-line. Most formulas which involve division are written in this manner.

FRACTIONS. Many times in radio work, quantities are parts of a whole unit and are called fractions. ½ volt is a part of an electrical unit known as a volt. The number written behind a slant-line, as the 2 in ½, or below a long dash is called the denominator. It tells into what portions the entire unit is divided. The number in front of the slant-line or above a long dash is called the numerator. This number tell us how many of the parts are included. For example, the fraction ⅝ tells us that the division is made into eight parts, and that five of these parts are included. Since in this fraction there are eight parts in all, and five are included in the fraction we are considering, three more such parts would complete a unit. This means that ⅜ more are needed to make ⅝ a complete unit. And we add these fractions by combining the numbers in the numerators, keeping the same denominators which must be alike to permit addition. From this we see that ⅜, or for that matter any fraction whose numerator and denominator are equal, is really one whole unit.

We have tried to recall a few facts about fractions to you. Most practical radio problems are worked in decimals and are of such simple nature that very little additional knowledge of fractions is needed.

DECIMALS. We write whole numbers in the regular way and place a period, called a decimal point, at the end. For example, the number forty-eight is written as 48. Fractions must be changed to have a denominator of 10, 100, 1000, or some larger number of this type envolving 1 followed by zeros. If the fraction is 2/5, it may be changed to 4/10, and is written as .4; this means that the number after the decimal point is the numerator of a fraction whose denominator is 10. The number 2.57 is read as two and fifty-seven hundredths. Notice that there are two figures after the decimal point and this accounts for the "hundredths."

Decimals are more convenient to use than fractions. Multiplication or division by ten, or some multiple of ten, simply shift the decimal point. The number 2.57 when multiplied by 100, simply requires the shifting of the decimal point to the right two places to correspond to the two zeros of the 100. The answer is 257. If this original number is divided by 100, the decimal is shifted to the left two places and the answer is .0257, the extra zero must be placed to show that the decimal point was moved two places to the left.

HOW TO WRITE LARGE NUMBERS. In radio work many times very large numbers must be expressed. A special short-hand method for doing this is used. When any number is multiplied by itself, it is said to be squared, or raised to the second power. For example, 10 times 10, which equals 100, may be written as:

$$10 \times 10 = 10^2$$

The little number two is called the exponent and indicates how many *tens* have been multiplied together. In the same manner, 10^3 would indicate $10 \times 10 \times 10$, or 1,000. A million can be written as 10^6. You will notice that the exponent also indicates the number of zeros in the number.

Now if we have a number as 240,000, it may be written in our short-hand as: 24×10^4. This means that the original number is equal to 24 times 10,000 and the 10,000 may be written as ten to the fourth power.

ELECTRICAL UNITS. For comparative purposes of the qualities encountered in electrical circuits, selected units are employed. These units are inter-related and are based on absolute basic reactions. Because of the nature of electricity and the associated force, magnetism, we cannot measure or note these forces directly with our senses of touch, sight, or smell, but must resort to indirect indicators (meters, lights, etc.) operated by these forces.

CURRENT. Electric current needed to light an electric bulb or to heat the filament of a radio tube consists of millions of moving electrons. A practical unit of electric current is an ampere which represents the passage of a tremendous number of electrons per second. It is easy to see that when one circuit has a current of 15 amperes, it has five times as much current as another circuit which has only 3 amperes.

While in power work an ampere is a convenient unit, some radio circuits have very little current, sometimes only a thousandth or a millionth part of an ampere, and a smaller unit is more applicable. A milliampere* is one-thousandth of an ampere. It takes 1,000 milliamperes to make up one ampere. A microampere* is one-millionth part of an ampere. It takes one million microamperes to add up to a single ampere. Formulas usually are expressed in amperes of current, and if the problem has other units of current, these must be changed to amperes.

VOLTAGE. The force which produces current (electron movement) from one body having an excess of electrons to another body having less electrons, acts as a pressure. This electrical pressure is called electromotive-force and its unit of measure is the volt. You know that an ordinary battery dry cell used in flashlights has an electromotive force of 1½ volts. At times electromotive force is abbreviated EMF, and may be called voltage, potential difference, or just potential. In radio work, we use voltages from a few volts up to 1,000 volts. A thousand volts is also known as a kilovolt*. Very small potentials are measured in microvolts and millivolts.

RESISTANCE. The unit of resistance is the ohm. Special units having very high resistance are used in some radio circuits. In case the resistance runs past one million ohms, it is expressed in megohms. A megohm is equal to one million ohms.

FORMULAS. Mathematics is a symbolic way of explaining and analyzing physical occurances. Arithmetical numbers represent quantity. Ten volts is ten times the standard measure—the volt. Numbers tell how many, is it larger or smaller, is it too small . . . all these are measures of quantity. Algebraic symbols (usually letters of the English and Greek alphabets) represent specific measureable quantities. For example E usually stands for voltage in electrical work. This is really another way for writing "voltage," i.e. we say E instead of the word voltage. In a like manner we usually write I for current, and R for resistance. A Greek letter π appears in many radio formulas and is a constant always equal to 3.14.

---

*The prefix *milli* means one-thousandth part, *micro* means one-millionth part, and *kilo* means one thousand times.

Using letters saves time and greatly simplifies the writing of formulas. The Ohm's Law may be written in words as:

Voltage = Current (multiplied by) Resistance

$$E = I \times R$$

or in algebraic symbols directly under. Of course, the algebraic way of writing is much simpler to write and remember.

Sometimes in the same problem, there are two different voltages, such as the grid and plate voltages in a vacuum tube. Here again we may use some letter, as "E," to represent voltage and use small letters after E and a little below it, to stand for grid and plate voltages respectively. As:

E_g .....grid voltage
E_p .....plate voltage

CIRCUITS. We are now ready to deal with a real but simple electrical circuit. Let us connect enough dry cells in series to obtain 45 volts. Since each dry cell produces 1½ volts, a total of 30 cells will be needed to make up this battery. The symbol for all batteries is the same, but the figures written along side can be used to indicate the voltage. Since voltage or electro-motive force is abbreviated E, we can write $E = 45$. Now let us connect a 15 ohm resistor across this battery. Notice how this is done in the schematic drawing. In actual practice you would use two pieces of insulated wire to make these connections. The symbol for all fixed resistors is the same, but here we can write $R = 15$, to indicate that the resistor is 15 ohms. This completes our circuit.

Now since the circuit is completed, electric current is flowing through the resistor. How much current is passing through the resistor? You may already know that current is measured in amperes, and so our question really asks, "How many amperes are passing through this circuit? How many amperes are supplied by the battery and pass around the circuit."

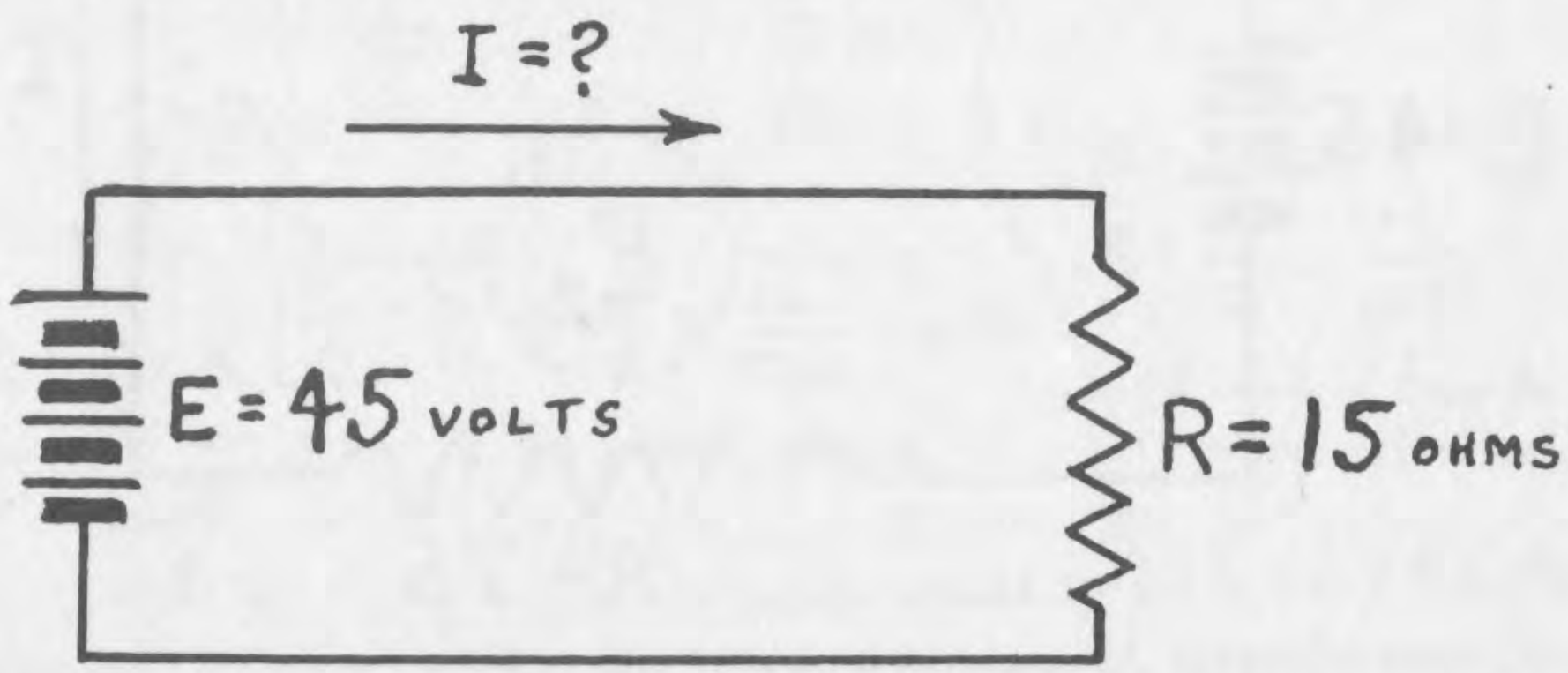

A simple circuit may consist of a resistor connected to a battery. Ohm's Law permits you to find the current when the voltage and resistance are known.

Ohm's Law. In all direct current circuits (batteries supply D.C.) there is an important relationship between voltage, resistance, and current. Using the following symbols:

E = voltage in volts
R = resistance in ohms
I = current in amperes

Ohm's Law states that the voltage is equal to the product of current and resistance in the above units. Since this relationship is very important in solving radio problems, we will state it mathematically in several ways:

$$E = I \times R \qquad I = \frac{E}{R} \qquad R = \frac{E}{I}$$

To use these formulas, first make certain that the known facts of the problem are expressed in the required units. If the resistance in a certain problem is expressed in megohms, change the value to ohms. Then use the formula which starts with the letter-symbol of the quantity you wish to find. Substitute in this formula the known facts as numbers in place of the other letters and solve.

In our earlier example, we were trying to find the current; then let us choose the formula which starts with the letter I. All units are already expressed correctly so no changes are needed. Substi-

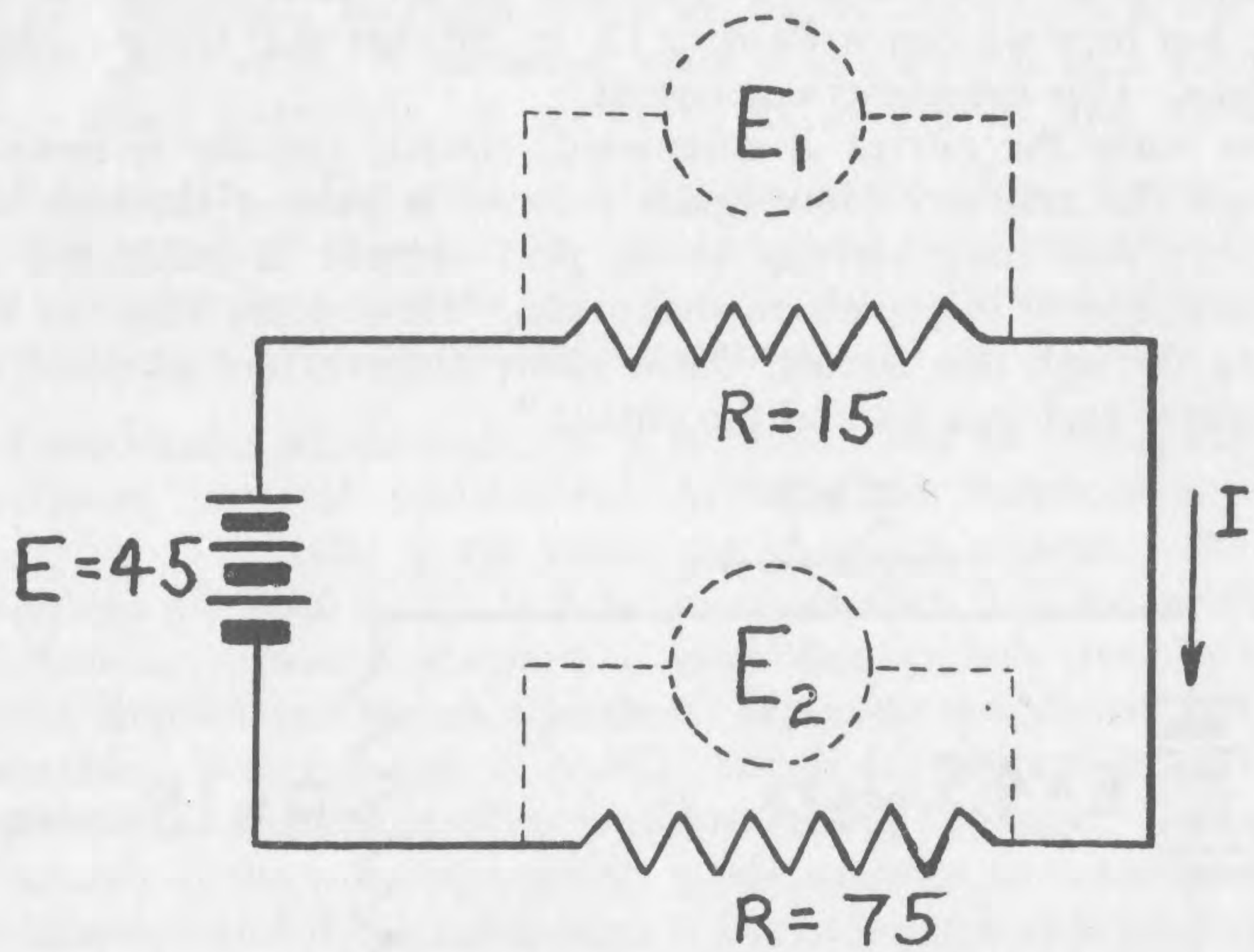

The voltage drops across the different elements making up the circuit, must equal the voltage supplied by the source (the battery in this case).

tute number 45 for E, and number 15 for R. Solve and you obtain the answer of 3. This means that the current is 3 amperes.

Please consider this additional example. A 1,000 ohm resistor is used in a certain radio circuit. It is known that the current passing through this resistor is 6 milliamperes. What is the voltage drop across this resistor?

Here we are trying to find E and must use the formula which starts with this letter. Resistance is expressed in ohms, but the current is in milliamperes. Since each milliampere is one-thousandth part of an ampere, 6 milliamperes are .006 amperes, i.e. 6/1000 of an ampere. Now substitute in the formula. Multiplying the current of .006 by resistance of 1,000, we obtain an answer of 6 volts. That is the voltage drop across this resistor.

How to Use Formulas. There are many practical formulas which you will have to use in your work. You will find every formula a short-hand statement of facts. Study this statement (formula) so you understand it. Now determine what fact is unknown and must be found with the aid of the formula. Leave the letter representing this fact alone, and consider the other letters. Each letter represents some other fact about the circuit or problem.

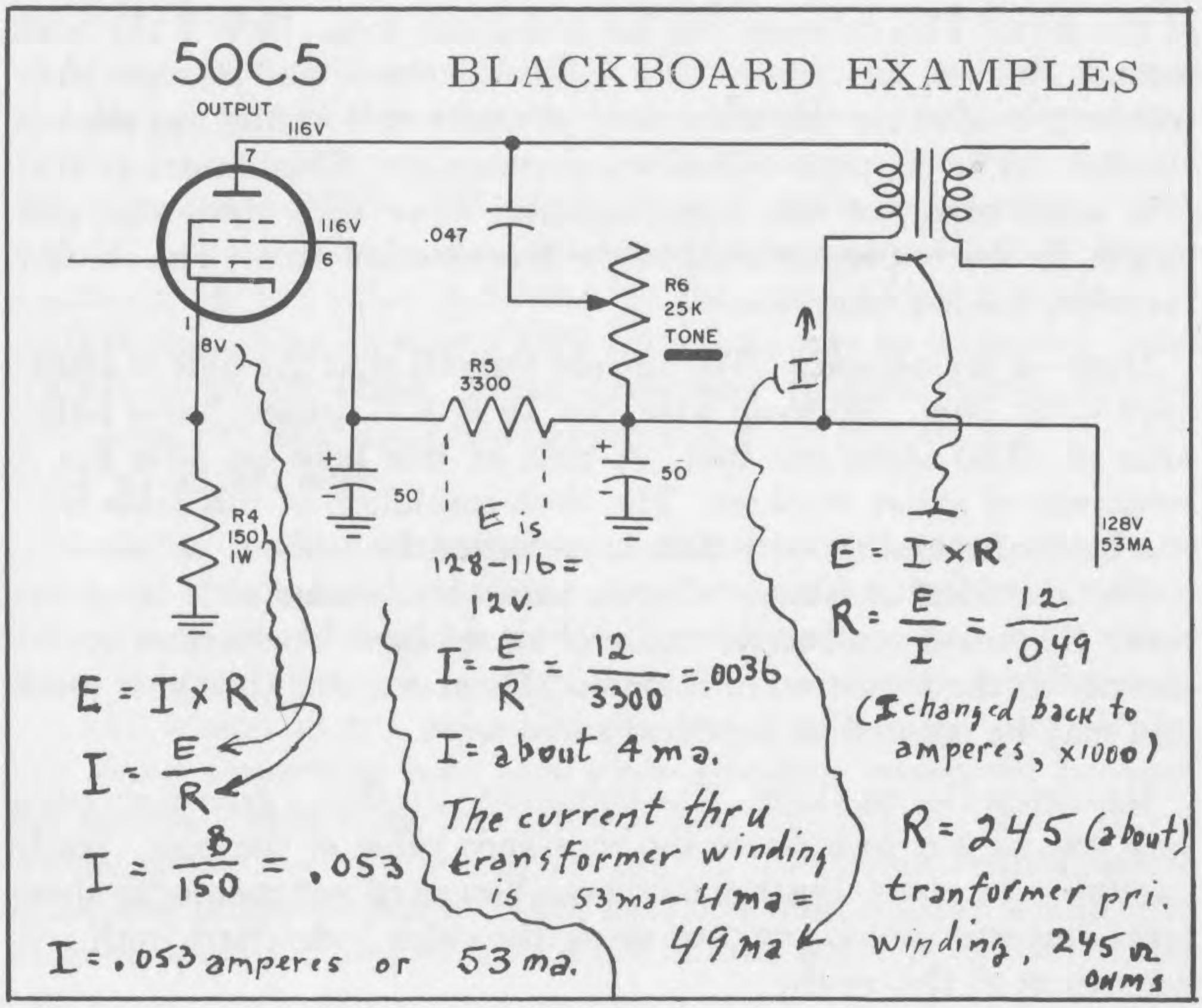

Find the numerical value of these facts, but make sure that they are in the units required. If the formula requires current to be in amperes, and the problem mentions the current in milliamperes, change the milliamperes to amperes by dividing by a thousand (one thousand ma. equals an ampere). After making these numerical substitutions simply solve for the unknown letter. This calls for getting all numbers on one side of the equal sign, and keeping the unknown letter alone on the other side.

CHAPTER TWO

Mathematics of Resistors

RESISTANCE AND THE SIZE OF THE CONDUCTOR. If a piece of copper wire has a definite resistance, a piece twice as long will have twice the resistance. A piece of wire may be thought of as a water pipe. Any pipe has opposition to the passage of water. If the pipe is made twice as long, somewhat as in the above example, the opposition or resistance will be doubled.

If you cut a piece of wire with a very sharp tool and looked right at the side of the cut, you would see a circular cross-section of the wire. This cross-section has a definite area. Now if the wire is made thicker, the cross-section will be increased and a larger path will be provided for the movement of electrons forming the electric current. A larger path will offer less resistance. This illustrates that two wires made of the same material have resistance, per unit length, inversely proportional to the cross-section area. The thicker the wire, the less resistance.

UNIT OF RESISTANCE. We already learned that the unit of resistance is the *ohm*. Hook-up wire, No. 18 B. & S. gauge, has a resistance of .0065 ohms per foot. A mile of this hook-up wire has a resistance of about 34 ohms. The cloth insulation of this same wire has insulation-resistance which is measured in millions of ohms.

The electrical resistance of most substances varies with temperature. Electrical conductors made of metal have an increase in resistance as the temperature is raised. However, this change is small and may be ignored in practical radio work.

RESISTOR COLOR CODE. The composition resistors are color coded in a special way to indicate the resistance value of the unit. Study carefully the chart illustrated below. You need not memorize these facts, but you should practice using the color code chart until you are expert at this work.

STANDARD RMA RESISTOR COLOR CODE CHART

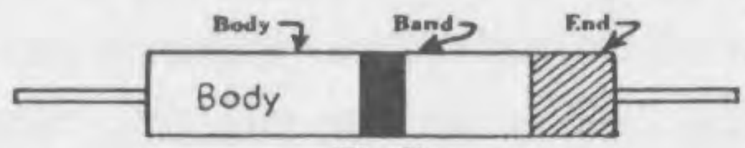

(Fig. 1)

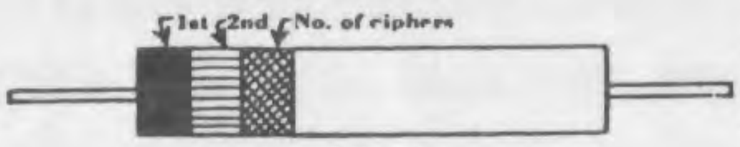

(Fig. 2)

Figure 1 represents an older method of color coding while Fig. 2 shows a more recently adopted method. Both are standard.

Body (Fig. 1) or first band (Fig. 2) represents 1st significant figure.

End (Fig. 1) or second band (Fig. 2) represents 2nd significant figure.

Band (or dot) or third band denotes number of ciphers after the first two significant figures.

Another Band is used on some resistors to designate tolerance as follows:

Gold Band for ±5%.

Silver Band for ±10%.

COLOR Used on Body End or Band IS	1st or 2nd Significant Figure IS	No. of Ciphers After the First Two Significant Figures IS
Black	0	None
Brown	1	0
Red	2	00
Orange	3	000
Yellow	4	0000
Green	5	00000
Blue	6	000000
Violet	7	0000000
Gray	8	00000000
White	9	000000000

EXAMPLE: Take the number 62,000, 6 is the first significant figure, 2 is the 2nd significant figure and the number of ciphers after the first two significant figures is 3.

As another example, let us suppose you find a resistor all red. There is no visible dot or end color. You may, in this case, assume that both the end and dot are also red and, therefore, could not be painted on the red body. Now to find the actual resistance value. The red body tells us that the first figure is 2. We assumed the end is also red, that makes the second figure also a 2. The dot is also red. This means that there are *two* more *zeros*. The total value is 2,200 ohms.

Accuracy of Resistors. One percent of any amount is one-hundredth part of this amount. Ten percent is 10/100 of the particular amount being considered. Most commercial carbon resistors are accurate to within 10% of the marked or indicated value. This means that any resistor may be of a resistance value 10% larger or smaller than the value indicated by the color code. A resistor of 50,000 ohms, plus or minus 10% accuracy, may be anywhere from 45,000 to 55,000 ohms. Please remember that the value may be anywhere between these two extremes and, by chance, may be very close to 50,000 ohms.

Probably you are somewhat surprised that radio parts can be so much off the required value and yet give good results in the circuit. Not all sections of a radio receiver permit such variation in resistance values. However, carbon resistors are usually employed in circuits where several values of resistors would work successfully. An audio amplifying tube may have a resistor connected between its terminal known as the cathode and the chassis which serves as the ground or grid return circuit. A 1,000 ohm resistor would serve the purpose. But a 2,000, or 3,000 ohm resistor would give as good operation and you could not tell the difference. Even 5,000

ohm resistor would give fair operation. Now if we choose a 2,000 ohm resistor for this purpose, and remember that it is only 10% accurate, we realize that actually we may be placing into the circuit a resistor having a value anywhere between 1,800 and 2,200 ohms. But from our explanation we can see that any of these values will give proper results.

Certain circuits require the use of resistors of very high accuracy. A precision resistor used in meter circuits is illustrated.

GRAPHS. Certain facts may be best represented or analyzed by presenting the data in the form of a graph. A graph shows the relation between two facts or group of facts. As for example, the graph illustrated represents the rise of current in milliamperes through a 1,000 ohm resistor, as the voltage is increased from 0 to 100 volts. The voltage is plotted as the ordinate (vertical scale) beginning with 0 and running up by equal subdivisions to 100 volts. The current begins with 0 and increases to the right; it is plotted as the abscissa (horizontal scale).

This graph illustrates that the current varies directly with the applied voltage (varies in a straight line). For a 1,000 ohm resistor values of current may be obtained for any voltage covered by the scale, and vice versa. At 50 volts, for example, following the dotted line, the value for current is 50 milliamperes.

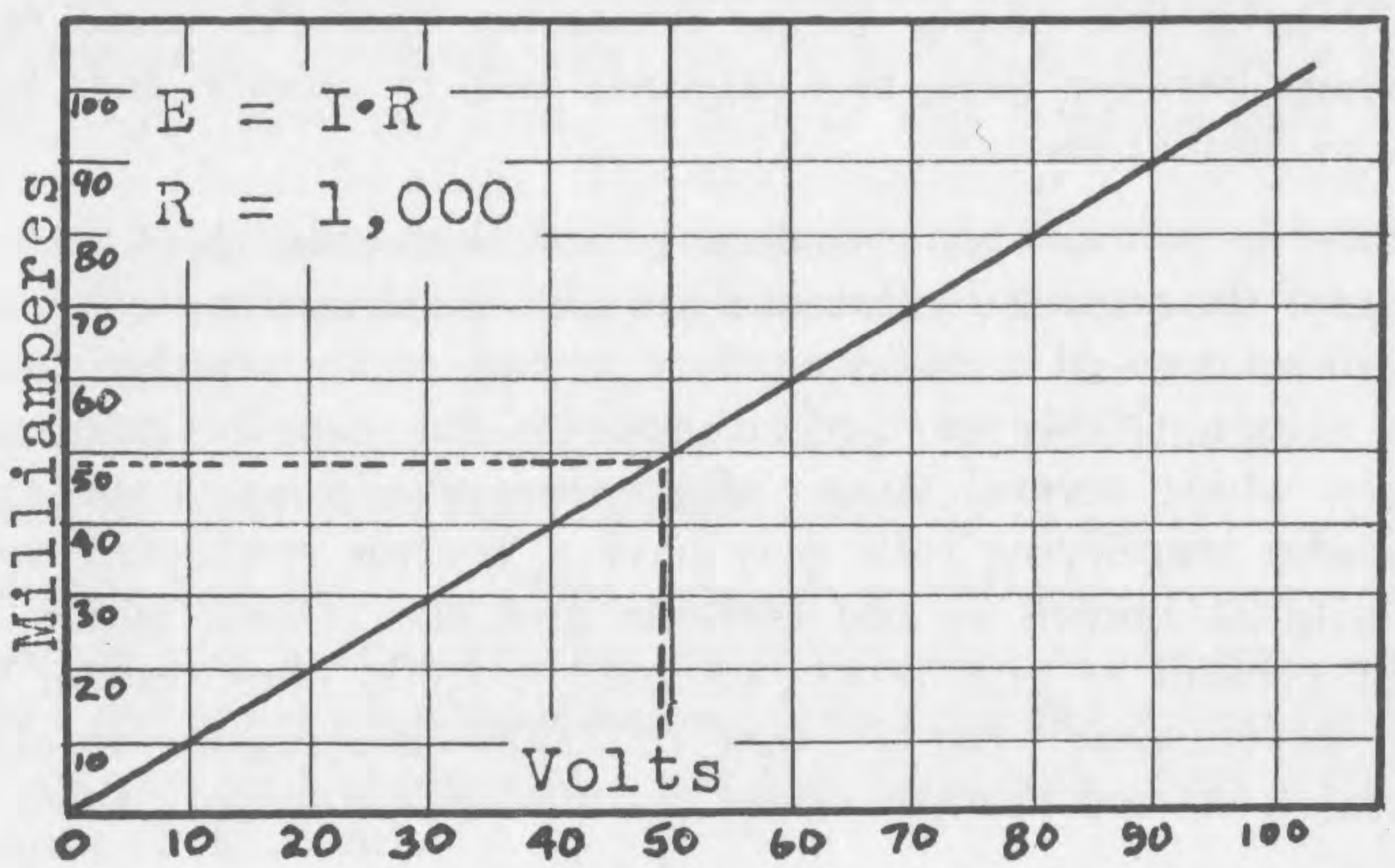

Resistors in Series. Two resistors may be connected, one after the other. This is a *series* connection. More than two resistors may also be connected in series. In radio work, resistors of various sizes are connected in series. The value of the equivalent resistance of the circuit formed by several resistors connected in series is obtained by adding the resistance values of all individual resistors. For example, if a 200 ohm and a 450 ohm resistors are connected in series, the equivalent resistance of the combination is 650 ohms. In mathematical terms, the total series resistance R_s equals the sum of the resistors making up the network, and these resistors may be R_1, R_2, R_3, etc.

$$R_s = R_1 + R_2 + R_3 + \ldots\ldots$$

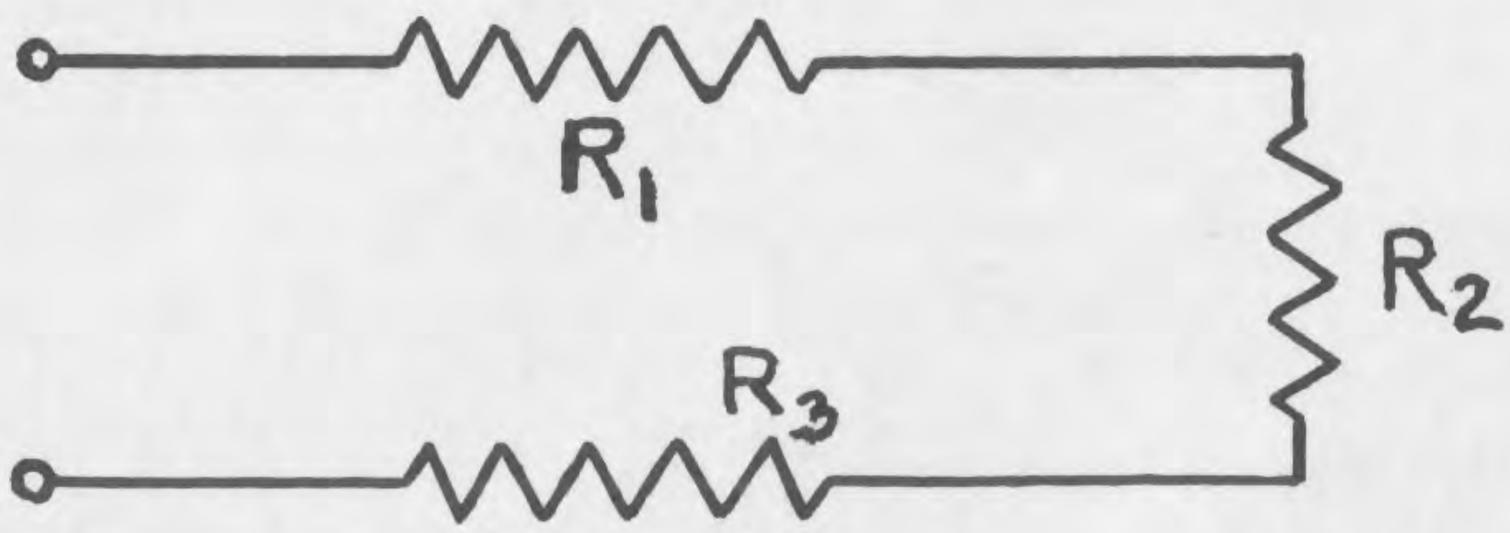

Several resistors may be connected in series. The total resistance is the sum of the individual resistors. The current in every resistor is the same, but the voltage drop across each resistor will be different, unless the resistors are all alike.

Resistors are connected in series to give values of resistance not obtainable in a single resistor. For example, 170 ohms can be obtained by connecting in a series a 100 and 70 ohm resistors, since no single 170 ohm resistor is commercially available. Sometimes resistors are connected in series to provide a tap-connection between the resistors.

Resistors in Parallel. Suppose we wire two resistors in such a fashion that one of the terminals (leads) of each resistor are joined together, and also the other leads are joined. The current in this type of network will pass through each of the resistors. This connection places the resistors in *parallel.* The equivalent resistance will be less than the value of the smallest resistor. Several resistors may also be connected in parallel. The equivalent total resistance of several resistors connected in parallel can be calculated from this formula:

$$R_p = \frac{1}{\frac{1}{R_1} + \frac{1}{R_2} + \frac{1}{R_3} + \cdots}$$

Usually not more than two resistors are wired in parallel and the formula simplifies to:

$$R_p = \frac{R_1 \times R_2}{R_1 + R_2}$$

If we connect a 4 and 12 ohm resistor in parallel, we can use this formula to find the equivalent resistance. R_1 will be 4 ohms, and R_2 will be 12 ohms. Substituting in the formula, we obtain:

$$R_p = \frac{4 \times 12}{4 + 12} = \frac{48}{16} = 3 \text{ ohms}$$

This means that these two resistors connected in parallel will act as a single 3 ohm resistor.

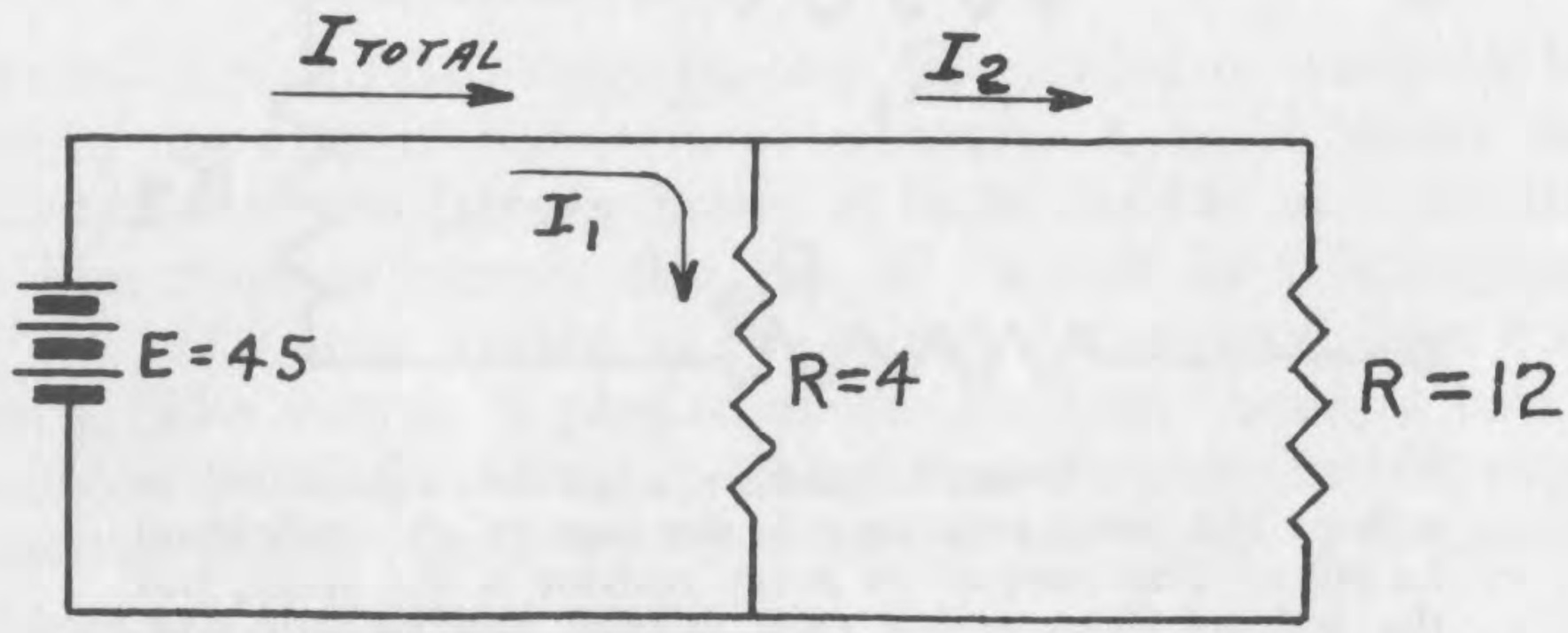

Usually only identical resistors are connected in parallel. If two 600 ohm resistors are connected in parallel, the equivalent resistance is reduced to one-half (divided by two since there are two resistors) of the 600. The resistance is then 300 ohms. If three such 600 ohm resistors are connected in parallel, the equivalent resistance is 600 divided by 3, or 200 ohms. In such case, each resistor handles its proportion of power.

How to Use the Parallel Resistor Chart. This alignment chart enables graphical solution of problems involving resistances connected in parallel. The values of the parallel resistors r_1 and r_2 and of the total effective resistance R_T must be read on the scales marked with the corresponding letters. To use, place a ruler across the two known values; the point at which the ruler crosses the third scale will show the unknown value. Pairs of resistances which will produce a given parallel resistance can be obtained by rotating a ruler around the desired value on scale R_T. The range of the chart can be increased by multiplying the values on all the scales by 10, 100, 1000, etc., as required. Scales r_{2A} and R_{TA} are used with scale r_1 when the values of r_1 and r_2 differ greatly.

Example No. 1. What is the total resistance of a 75 ohm resistor and a 150 ohm resistor connected in parallel? Answer: From dotted line No. 1, R_T is 50 ohms.

Example No. 2. What resistance in parallel with 750 ohms will give a combined value of 500 ohms? Answer: From dotted line No. 1, r_2 is 1,500 ohms.

Example No. 3. What is the combined resistance of 1,750 ohms and 12,500 ohms? Answer: Scales r_1 and r_{2A} are used and from dotted line No. 3, R_{TA} is 1,535 ohms.

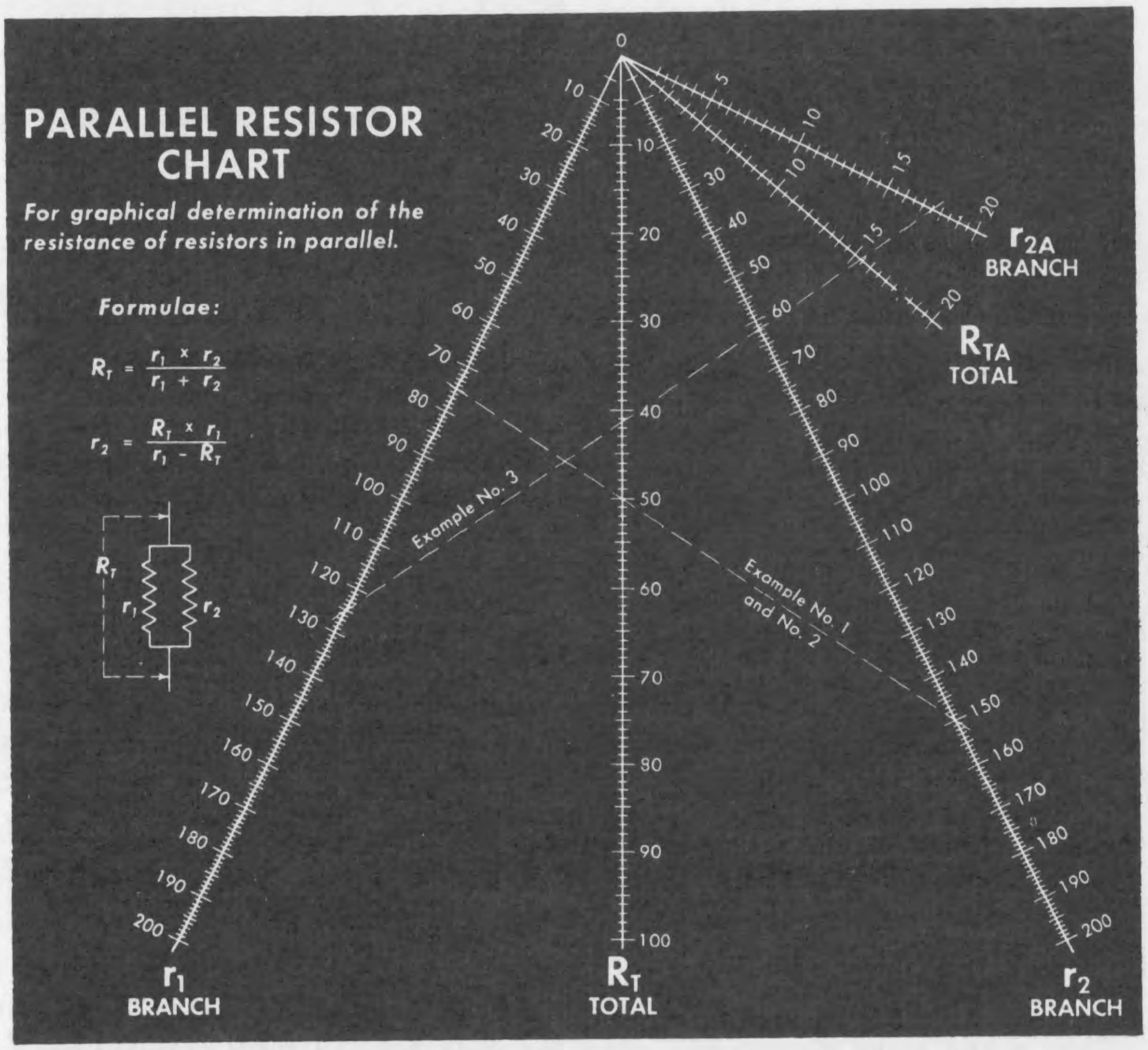

Example No. 4. What is the combined resistance of 400, 600 and 800 ohm resistors in parallel? Answer: First find R_T for 400 ohms and 600 ohms. Then set the 240 ohms thus found as a new r_1 and 800 ohms as r_2 and the final answer is found to be 185 ohms.

Combination Circuits. In circuits where more complex combinations of resistance are present, usually it is possible to solve individual parts of the circuit and combine results. This process is best illustrated with an example.

In circuit A, we may consider R_2 and R_3 as parallel resistors.

$$R_{23} = \frac{R_2R_3}{R_2 + R_3} = \frac{3 \times 6}{3 + 6} = \frac{18}{9} = 2 \text{ ohms}$$

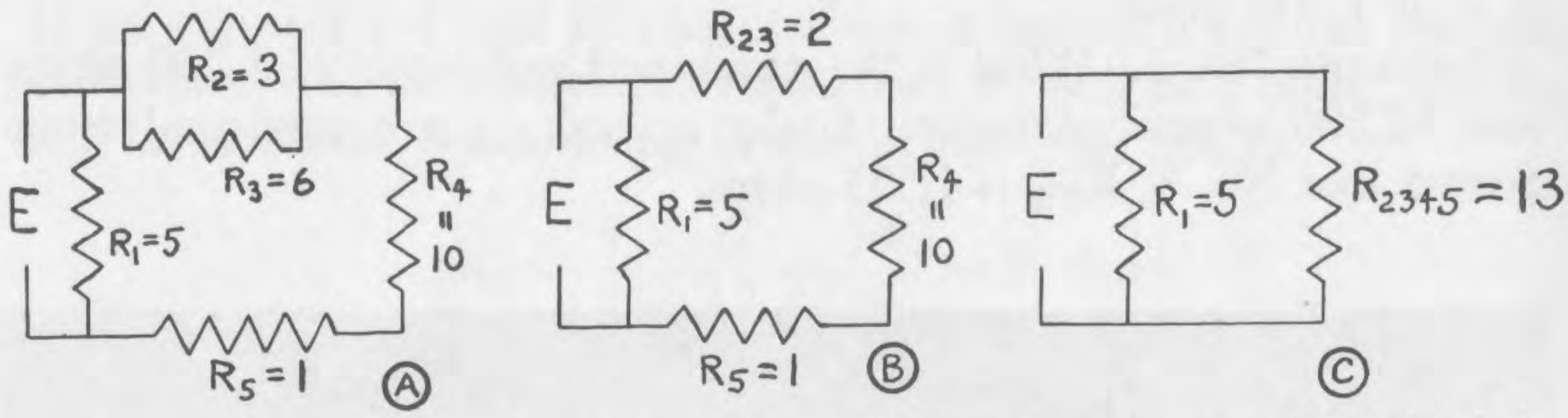

Certain more complex resistor networks can be solved in steps, using the parallel and series formulas.

Now we can replace circuit A by B, placing a single resistor R_{23} in place of R_2 and R_3. Consider now R_{23}, R_4, and R_5 as a single series circuit.

$$R_{2345} = R_{23} + R_4 + R_5 = 2 + 10 + 1 = 13 \text{ ohms}$$

We now can replace B, with circuit C. This circuit is a simple parallel circuit having two resistances of 5 and 13 ohms.

$$\text{Total equivalent resistance} = \frac{5 \times 13}{5 + 13} = \frac{65}{18} = 3.6 \text{ ohms}$$

Power. Besides being rated in ohms, every resistance possesses another electrical rating corresponding to its power handling ability or "wattage." The current flowing in a resistance, causing a definite voltage drop, results in a certain dissipation of power measured in watts and is equal to the current squared times the resistance. Symbol for watts is W.

$$W = I^2R$$

This is the most commonly used formula for wattage computation, although others made up of related factors are also used:

$$W = I \times E \qquad W = \frac{E^2}{R}$$

Composition-type carbon resistors are rated from ¼ to 2 watts depending on their size. Wire-wound resistors begin with about 5 watt size and go up to very large sizes that are used in transmitting equipment.

WATTAGE RATING. The power dissipated by the resistor is changed to heat; if the heat is excessive due to overloading the resistor by more than just the normal current flow, the heat so developed may injure the resistor element. The ratings given are for open air mounting and where there are no close parts that may be injured by the heat. In mounting resistors in a closed chassis adjacent to other easily harmed parts, it is best not to load the resistors more than 50% of their rated wattage.

EXAMPLES. If a resistor of 3 ohms, carries a current of 2 amperes, what is the wattage dissipated?

$$W = I^2R = 2^2 \times 3 = 2 \times 2 \times 3 = 12 \text{ watts}$$

A biasing resistor causes a drop of 30 volts, with a current of 15 milliamperes (.015 amperes). What is the wattage of the resistor?

$$W = I \times E = .015 \times 30 = .45 \text{ watts}$$

In this case a half watt resistor would do, but it would be better to use a one watt unit. More examples will appear later.

MAXIMUM CURRENT. The question of what current is permissible once the wattage and resistance of a unit are known comes up quite often. The formula below, derived from the regular wattage formula, will enable us to do this.

$$I = \sqrt{\frac{W}{R}}$$

The following problem may be taken as an example. What current may a 2 watt, 800 ohm resistor carry as a maximum?

$$I = \sqrt{\frac{2}{800}} = \sqrt{\frac{1}{400}} = \frac{1}{20} = .05 \text{ amperes}$$

HOW TO USE THE OHM'S LAW CHART. The alignment chart, prepared by the Ohmite Mfg. Co., enables graphical solution of Ohm's Law problems. To use, place a ruler across any two known values on the chart; the points at which the ruler crosses the other scales will show the unknown values. The *italic* figures (on the left of the scales) cover one range of values and the roman figures cover another range. For a given problem, all values must be read EITHER in the *italic* numbers or in the roman numbers.

Example No. 1. The current through a 12.5 ohm resistor is 1.8 amperes. What is the voltage across it? The wattage? Answer:

Dotted line No. 1 through R = 12.5 and I = 1.8 shows E to be 22.5 volts and W to be 40.5 watts.

Example No. 2. What is the maximum permissible current through a 10 watt resistor of 2,000 ohms? Answer: Dotted line No. 2, through W = 10 and R = 2,000, shows I to be 70 milliamperes.

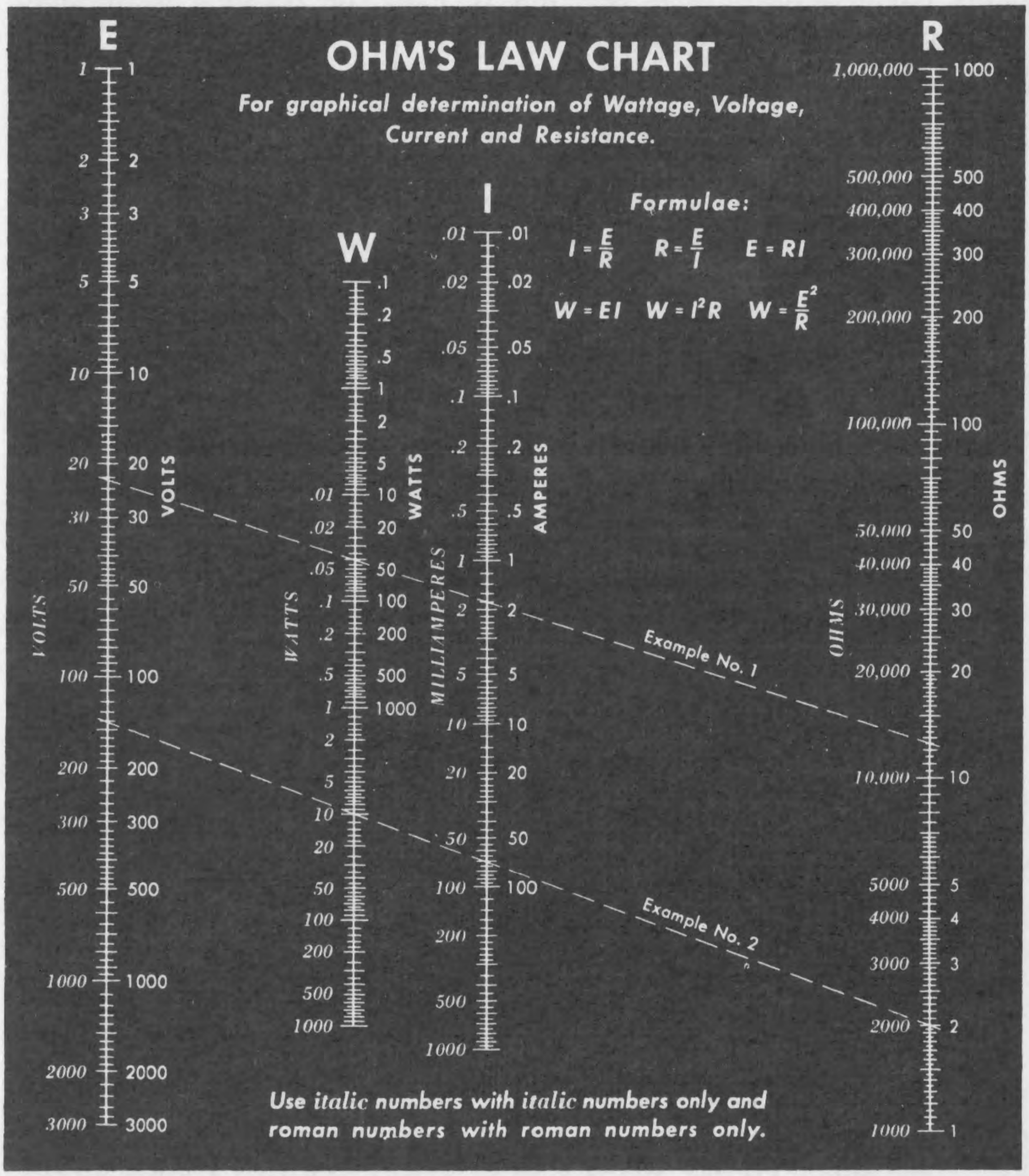

In practical radio work, approximate values are accurate enough. With the aid of this chart you can work most resistance problems.

Resistor Circuits in Radio. Please refer to the illustration (A) of the figure. Here we have a choke commonly used in a power supply of a radio set. We know that this choke has a

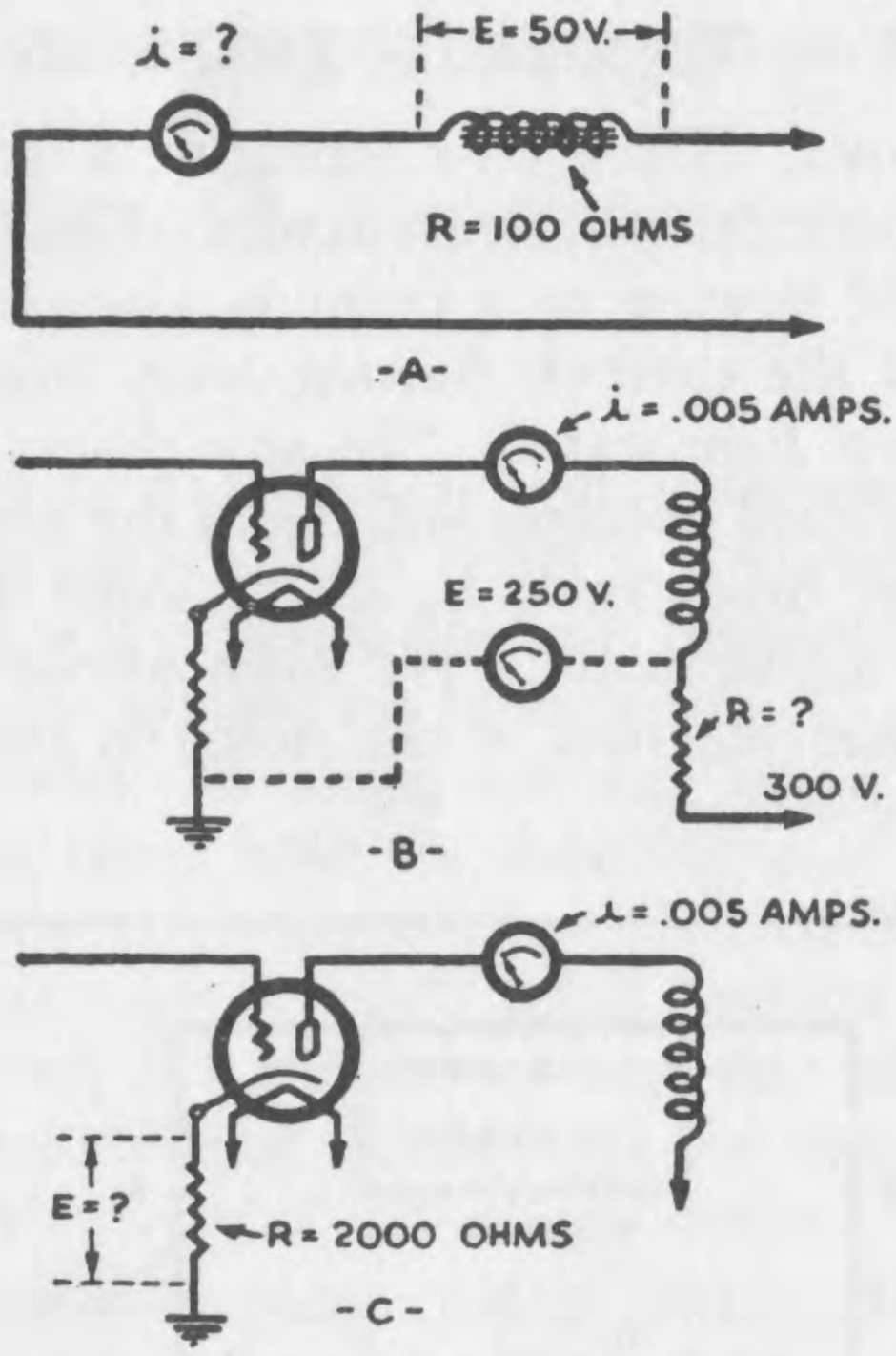

resistance of 100 ohms, and that it produces a voltage drop of 50 volts. Applying the Ohm's Law statement, we can solve for the current, I.

$$I = \frac{E}{R} = \frac{50}{100} = .5 \text{ amperes}$$

In illustration (B) you will notice that the voltage from one side of the resistor to ground is 250 volts as indicated by the meter. From the other side of the resistor to ground the voltage is 300 volts. This indicates that 50 volt drop occurs across the resistor. The current, I, is .005 amperes, as indicated on another meter. We use another form of the Ohm's Law, to solve for R.

$$R = \frac{E}{I} = \frac{50}{.005} = 10{,}000 \text{ ohms}$$

In illustration (C) the current passing through the tube and indicated on the meter as .005 amperes, will also pass through the resistor wired in the cathode circuit. We know this resistor is 2,000 ohms. What will be the voltage drop across this resistor?

$$E = I \times R = .005 \times 2{,}000 = 10 \text{ volts}$$

In the figure above, we wish to know what power will be dissipated in the 2,000 ohm resistor. Using the formula below and making the needed substitutions, we obtain the answer.

$$W = I^2R = .005 \times .005 \times 2{,}000 = .05 \text{ watts}$$

KIRCHHOFF'S LAWS. These laws constitute a further application of Ohm's Law to more complicated circuits. *Kirchhoff's First Law* states: "Any current flowing to a point in any electrical circuit is equal to the sum of the currents flowing away from that point."

Kirchhoff's Second Law states: "In any closed electrical circuit the sum of the impressed voltages will equal the sum of the voltage drops." The voltage drops must be in the same direction or they must be combined algebraically. We have already used this law, when we noticed that the sum of the drops in two series resistors equalled the battery voltage.

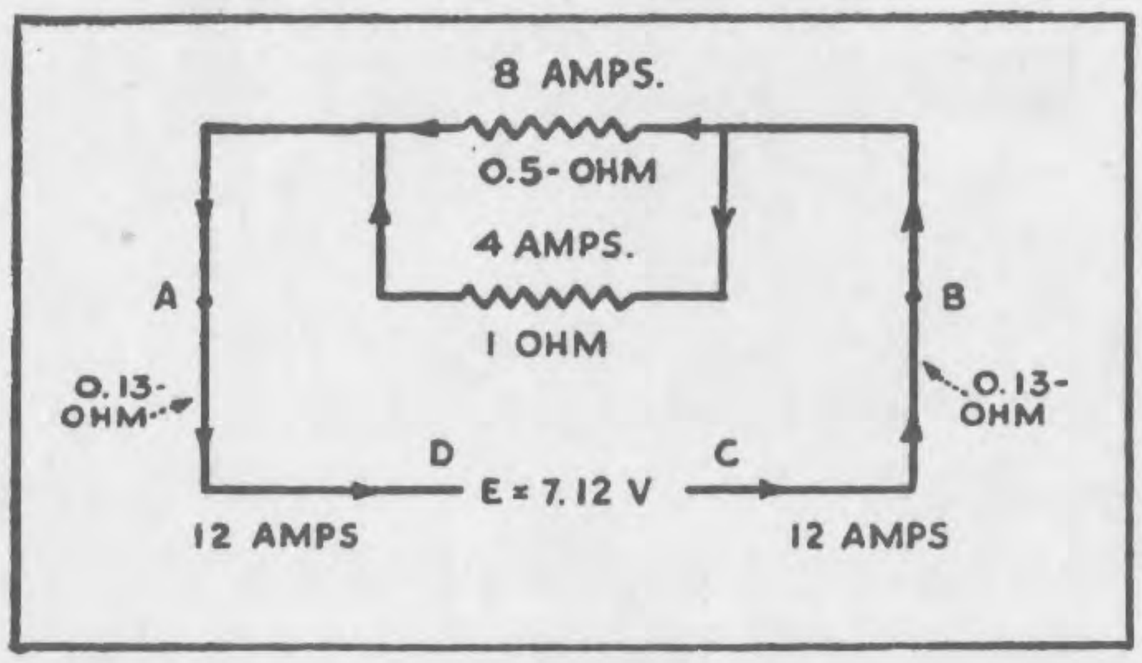

In the figure, you will note that the sum of the currents, 8 amperes and 4 amperes, flowing towards point A, is equal to the current, 12 amperes leaving point A. This illustrates the First Law.

Kirchhoff's Second Law is also numerically illustrated in this figure. Assume that the resistance of the various parts of the circuit are as marked, and that the total internal resistance of the battery is .6 ohms. Then according to the statement of the Second Law, if the impressed voltage is 7.12 volts: Impressed Voltage = sum of voltage drops in the circuit, or the drops will be, (C to B) $12 \times .13$, plus (B to A) only one branch needs to be considered since the voltage across the branches is the same, 4×1 (or 8×0.5), plus (A to D) $12 \times .13$ to complete the circuit. When you add up the results, you will find the answer will check with 7.12 volts.

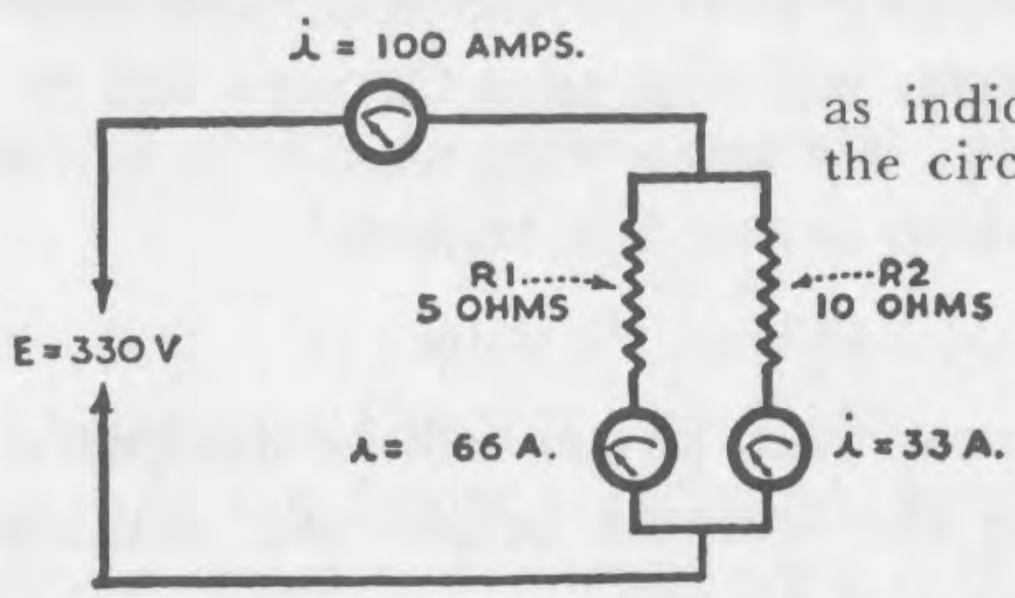

Check the values of current as indicated by the ammeters connected in the circuits. Do you agree with the results?

CHAPTER THREE

Coils and Transformers

UNIT OF INDUCTANCE. The unit of inductance is the *Henry*. A coil has an inductance of one henry if a current change of one ampere per second will produce one volt pressure in the coil. The letter L is used as the symbol for inductance.

The henry is a relatively large unit and while some audio coils having special iron cores have an inductance of several hundred henries, the inductance encountered in coils used in radio frequency work and having air cores is only a small fraction of a henry. One thousandth of a henry is a millihenry, and one millionth part of a henry is called a microhenry. Coils used for tuning the broadcast frequencies are in the order of 220 microhenries.

Inductive coils may be connected in series, in parallel, and in other combinations *without* the magnetic fields interlinking to any degree. When inductors are connected in series, under these conditions, the total effective inductance is the sum total of the individual inductances.

MUTUAL INDUCTANCE. If two coils are connected in series and do have their magnetic fields interlinking, the total inductance for the two coils may be greater or less than the sum of the individual inductances. The reason for this is easy to explain. If one coil's magnetic field links the second coil, the turns of this second coil may be considered as adding to the turns of the first coil. Now it is obvious that the inductance increases with the number of turns, and the coil will have an *apparent* higher inductance. This same reasoning will apply to the second coil inductance in relation to the first coil.

We have assumed that the turns of one coil were equivalent to the turns added to the second coil. This, of course, requires that both coils have the turns wound in the same direction and be placed in a position to have the magnetic fields attract each other. If this process is reversed, as when the turns are wound in the opposite direction, or the magnetic fields buck each other, then the second coil will act to "subtract" the effect of some turns on the first coil. Less turns on the coil will reduce the effective inductance. Coils which are spaced a great distance apart, or are separated with metal shields, or are at right angles to each other, have very little effect on each other.

The change of the inductance value of a coil, because of the action described, is really equal to another coil being connected in series. It is as if this imaginary coil had a definite value of inductance which was added or subtracted from the inductance of the real coil. This additional inductance which must be considered in practical circuits is known as mutual inductance.

Coefficient of Coupling. When two coils are arranged so that some definite mutual inductance exists, the coils are said to be magnetically coupled. In many practical calculations, as you will see later, it is more convenient at times to express the amount of coupling as a fraction of the maximum coupling possible rather than the numerical value of mutual inductance. If the fields of two coils are almost in common, the coefficient of coupling approaches 1, but if the coils are segregated the coupling coefficient becomes zero. Mathematically, the coefficient of coupling, k, may be expressed in terms of the mutual inductance M, and the self-inductance of the coils, L_1 and L_2.

$$k = \frac{M}{\sqrt{L_1 L_2}}$$

Period. The amount of time needed for one cycle to be completed is known as the period. If the number of cycles per second is known, then the period can be found by dividing one by this number. For example, the period of 60 cycle current is: 1/60 or one-sixtieth part of a second.

Usually one cycle is produced by rotating machinery when a conductor sweeps all the way around, that is completes a circle. We know that a circle has 360°. This permits us to divide the space taken by a sine-wave single cycle into 360°. In radians,* 180° is equal to the Greek letter π, and fractions of π are used at times to represent division points. Notice that if a voltage, in the form of a sine wave, has zero value at 0°, then it has a maximum at 90°, zero value again at 180°, and another maximum at 270°. The wave is the same at 0° and 360°.

Effective Value. At different parts of the cycle, the A.C. voltage is equal numerically, without reference to the positive-negative terminals, to some value between zero and maximum voltage. The instantaneous voltage is changing all the time. The value of this varying voltage as indicated by the usual A.C. volt-

*The angle sustained by an arc of a circle which has its length equal to the radius, is equal to one radian.

meter is the root-mean-square, RMS, value. The RMS value is equal to .707 of the maximum value. If in a circuit the peak (highest, maximum, greatest) voltage is 100 volts, then the RMS value indicated by a meter will be 70.7 volts. The RMS value is also called *effective* value since a D.C. voltage of this same value would cause as much heat in a resistor as this A.C. voltage. The house power circuits of 110 volts A.C. really means 110 volts RMS or effective, and an electric iron will give the same heat from this voltage as from 110 volts D.C.

In application, it is sometimes important to know the maximum or peak value of A.C. voltage when the RMS only is measured. The maximum voltage is equal to the RMS value multiplied by 1.4 approximately. From this we see that the maximum A.C. voltage or current is about 1½ times the RMS value as indicated on a meter.

Inductive Reactance. We have already learned that an inductance tends to prevent any changes in current intensity. If a circuit containing an inductance (coil) is connected to a source of D.C., such as a battery, a short time will be required for the current to rise to its steady maximum value. This is because the current starts from zero at the instant the circuit is completed, and the inductance will oppose a sudden change to the maximum value.

Now consider the same inductance being connected to a source of 60 cycle A.C. Let us complete the circuit at the very instant the voltage is zero and is just starting to rise. The current will have to change from zero to some maximum value in relation to the voltage, but will be reduced in value because it will always lag behind the value it would have if the inductance were not present. The inductance will make the value of current lag and when the current reaches a value, still considerably under the maximum it would be with a corresponding D.C. voltage, the A.C. voltage will drop back to zero. The current, therefore, will never reach the maximum value it had with D.C., and it seems that an inductance has a sort of special opposition to alternating current.

The more times per second the voltage drops to zero, the less chance the current will have to rise and will remain at lower values. We can see from this that the higher the frequency (greater number of cycles per second) the greater will be this special inductive opposition. This action of an inductance to limit current in an A.C. circuit is known as inductive reactance. Inductive reactance is very similar to resistance, but is different for various frequencies, and increases with the frequency. Inductive reactance is also measured in ohms.

The symbol for reactance is letter X. For inductive reactance we use the special symbol, X_L. Inductive reactance can be calculated from a very simple formula:

$$X_L = 6.28 \times f \times L$$

The constant 6.28 is really equal to 2π, f is the frequency in cycles per second, and L is the inductance in henries.

Let us work a simple problem. A choke of 10 henries is used in a power supply to filter 60 cycle hum. We use the above formula and make the needed substitution.

$$X_L = 6.28 \times 60 \times 10 = 3{,}768 \text{ ohms}$$

This means that the 10 henries choke will have opposition to 60 cycle hum, the equivalent of 3,768 ohm resistor. But while a resistor will also have this same opposition to the D.C., the choke will have negligible resistance (reactance) to direct current.

Turns Ratio. The turns ratio is the number obtained by dividing the number of turns of the secondary. N_s, by the number of turns of the primary, N_p. It is also the voltage ratio of the secondary, E_s, to the voltage of the primary, E_p.

$$\text{Turns Ratio} = \frac{N_s}{N_p} = \frac{E_s}{E_p}$$

CHAPTER FOUR

Condensers

Units of Capacity. The degree of ability of a condenser to store electrical charges is known as the *capacity* of the unit. Since the quantity of the electrical charge depends directly upon the voltage of the source, capacity is defined in terms of not only how much charge is stored, but also on how much voltage is applied. The unit of capacity is the *farad.* The farad is the capacity of a condenser that will store one coulomb of electricity at the pressure of one volt.

The farad is much too large a unit for radio applications, the microfarad or mfd., equal to one-millionth of a farad, is commonly used. Condensers of very small capacity also are rated in still smaller units of micro-microfarads or mmfd. which are equal to one-millionth of a microfarad.

CONDENSER CIRCUITS. Condensers, similarly to resistors, may be connected in series and in parallel. When condensers are connected in parallel, the final capacity is greater than that of any condenser used in the combination. The total is equal to the sum of all the individual condensers connected in parallel.

$$C_p = C_1 + C_2 + C_3 + \ldots\ldots\ldots\ldots$$

Where C_p is the total capacity of the units in parallel. This formula suggests a means of obtaining larger capacity from a number of smaller units. Each condenser used, however, must be able to withstand the applied voltage of the circuit. Should 15 mfd. be

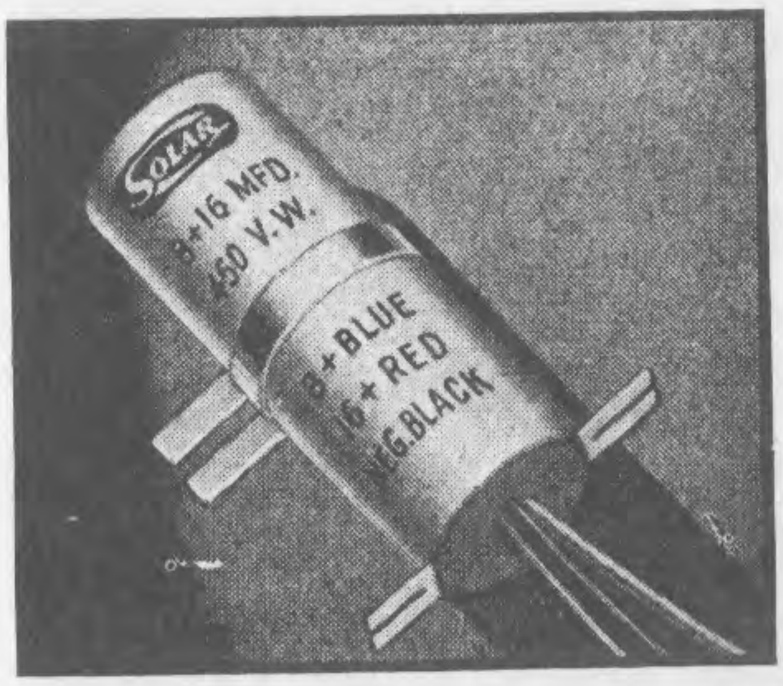

The color code for multi-section condensers is marked on the container. Dry electrolytic condensers may be mounted in any position.

required and only 5 mfd. units be on hand, three of these may be employed connected in parallel with equally satisfactory results as might be obtained from a single 15 mfd. condenser.

When condensers are connected in series, the final capacity of the combination is always less than that of the smallest condenser used in the combination. It is very rarely that condensers are used in series, except when all are of the same capacity. In such cases the total capacity

$$C_s = \frac{C}{n}$$

where n = number of condensers of capacity C, connected in series.

MAKING REPLACEMENTS. In replacing fixed condensers, the serviceman need not be too critical. A slight difference of capacity will ordinarily not upset the circuit and this is especially true if the unit is used as a filter. 8 or 12 mfd. units may be used for 10 mfd. However, the rated working voltage is important and must not be exceeded. Condensers rated at 550 volts D.C. may be used on any voltage up to this maximum rated voltage, but not above. A.C. voltage peaks are 1.4 times higher than the measured and indicated RMS voltage. For example, 110 volts A.C. has a peak voltage of 110×1.4, or 154 volts.

Capacitance Reactance. A condenser connected to a source of voltage, becomes charged with this potential, and tries to keep the voltage unchanged. A condenser attempts to prevent voltage increases by slowing down the action, and tries to overcome voltage decrease by supplying the voltage required. This explanation is not rigorous, but will give you the needed understanding about condenser action. In many ways, a condenser limits changes in voltage in a manner similar to an inductance limiting the action of changes in current.

The tendency of a condenser in preventing the alternating voltage of the source to rise to its true value at the instant, limits the current in the circuit, and is, therefore, similar to the effect of a large resistor which could have been in the circuit. This opposition which a condenser offers to the flow of current is known as capacitive reactance, symbol X_c, and is also measured in ohms. We have a formula for calculating capacitive reactance.

$$X_c = \frac{1}{6.28 \times f \times C}$$

where f is the frequency in cycles per second, and C is the capacity in farads. Since most circuits use condensers which are measured in microfarads, we can use a more convenient formula, where the value in *microfarads* can be substituted for C.

$$X_c = \frac{159{,}236}{f \times C}$$

CHAPTER FIVE

L, C, and R, Combined Circuits

Practical Inductive Circuits. In discussing circuits incorporating an inductance, we have assumed that resistance was not present. In practice, of course, every coil is made of wire which in turn has more or less resistance. Therefore, an inductance has resistance which behaves as if it is connected in series with the inductance. This behavior permits us to assume, in solving problems, that the inductance has no resistance, but that a separate resistor is connected in series and has the resistance value of this coil resistance.

Phase Relationship. In a pure resistive circuit, the current varies with the voltage in accordance with Ohm's Law. The

current increases in step with the voltage, and falls to zero when the voltage is zero. In a pure inductive circuit this is not so. The property of inductance tends to prevent current variations, and although these variations follow the voltage changes, they are somewhat behind in time. There is a period of time after the voltage reaches a maximum value, before the current reaches its maximum value. As the voltage begins to get smaller during a part of the A.C. cycle, the current tries to remain the same, and is replenished in part by the breaking down of the magnetic field. When the voltage returns to zero, the current is still very much present. This phase relationship or time difference between voltage and current is always present in inductive circuits. The current *lags* behind the voltage. In other words, the voltage leads the current. In pure inductive circuits the current lags behind the voltage by 90°. This means that 90 electrical degrees (of time) separate the peak values of voltage and current.

If a circuit has both inductance and resistance, as all real inductive circuits do, the time relationship or phase angle is neither zero as in the case of pure resistance, nor 90° as in the case of pure inductance, but is some value between 0° and 90°. If X_L is much larger in value than the resistance, then the angle is very close to 90°. In a circuit having a large resistance value and very little inductive reactance, the phase angle is close to zero degrees.

Impedance. Now both the resistance and the inductive reactance of the circuit oppose the passage of electric current. The opposition, however, is not the same since the phase angle causes a difference in the voltage to current relationship. The total equivalent opposition of the two can be found. This total combined opposition is known as impedance and is also measured in ohms. The symbol for impedance is Z.

$$Z = \sqrt{R^2 + X_L^2}$$

The impedance can be found with the aid of this formula if the inductive reactance and the resistance of the circuit are known. In most circuits, the inductive reactance is so much greater than the resistance, that you may assume that $Z = X_L$.

Geometric Considerations. It is possible to represent resistance value by a straight line. The actual size of the line will depend on the resistance. You may let one unit of size equal one ohm of resistance or perhaps five ohms. Referring to the illustration, you will see that the line R represents the resistance as 7 units long.

In order to represent reactance (either inductive or capacitive), another line may be used. Here again, the unit of size represents

a number of ohms of reactance. Since the voltage across the resistor and the reactance are 90° out of phase, these two lines are illustrated at right angles (90°) in respect to each other.

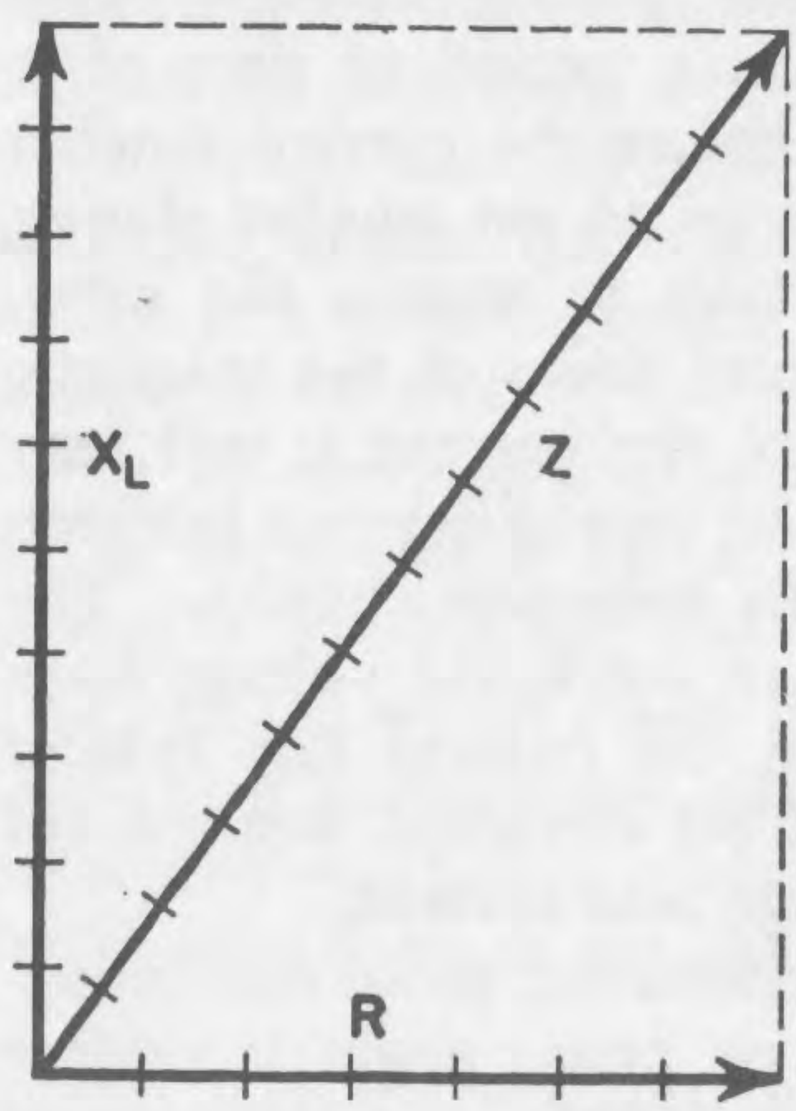

INDUCTANCE AND RESISTANCE

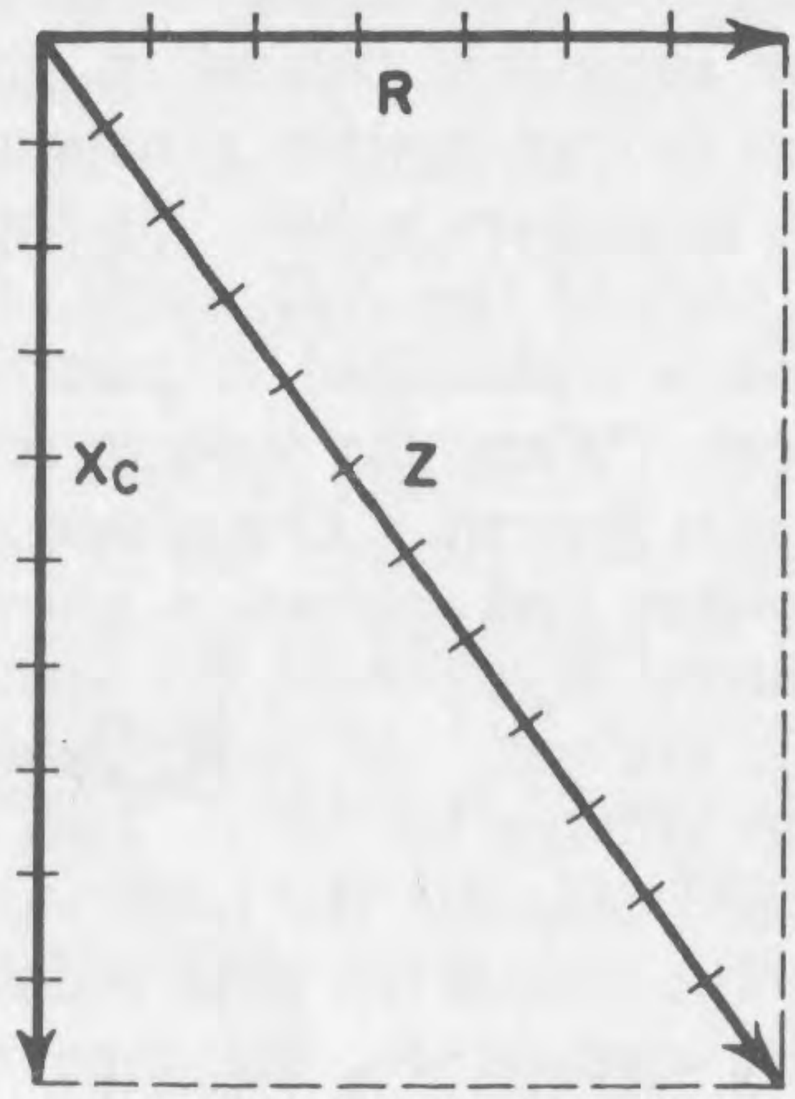

CAPACITY AND RESISTANCE

WHAT IS Q? Uusually reactance is the desired characteristic of a coil while resistance is not. A figure of merit for coils is needed to enable us to judge between various coils. We call this figure of merit for comparative purposes, Q and consider it equal to the inductive reactance divided by the R. F. resistance.

$$Q = \frac{\text{Reactance}}{\text{Resistance}} = \frac{X_L}{R} = \frac{6.28 \times f \times L}{R}$$

Since both the reactance and resistance increase with frequency, but not in the same order, the Q of coils will vary with the frequency used for the test. In the broadcast band, 540 to 1,750 kilocycles, the Q of coils increases for higher frequencies and special method are used to "even it out" for the entire band. The Q determines the gain one obtains from a coil. The voltage step-up is approximately equal to the Q of the coil. Broadcast coils have a value of Q between 75 and 200.

CIRCUITS WITH C AND R. We have already mentioned that all condensers had losses and these could be represented as the losses created by a resistor connected in series with a perfect condenser of the same capacity as the unit we are considering. In many circuits, an actual resistor may be connected in series with a condenser to accomplished the results required by the circuit.

Here, as in the case of a L and R circuit, the phase relationships differ and the reactance of the condenser and the resistance of the resistor must be combined in a special way to obtain the total opposition or impedance of the combination. The impedance in this case is,

$$Z = \sqrt{R^2 + X_C^2}$$

In solving a problem, X_C is found first from the formula you already know, then this value and the value for R, are substituted in the above formula, and the answer for the impedance is obtained.

TIME CONSTANT. If a condenser is made to discharge through a resistor, a period of time will pass before the condenser loses a fraction of its charge. The time required for a condenser to lose that part of its charge which will cause the voltage to fall to 37% of its initial value, is called the *time constant*. Expressing time in seconds as t, resistance R in megohms, and C in microfarads, we have a very handy formula,

$$t = R \times C$$

CIRCUITS WITH C AND L. You probably recall that an inductance causes the voltage to lead the current (or the current to lag behind the voltage). You also know that, on the contrary, capacity alone causes the voltage to lag the current. The effects are opposite to each other. Now if a circuit has both capacity and inductance, one will partially overcome the effects of the other. The entire circuit will act as either inductive or capacitive reactance depending on whether X_L or X_C is larger for the particular frequency. If the inductive reactance is greater than the capacitives reactance, then some of this X_L will overcome the X_C, and the balance of the inductive reactance will be left.

RESONANCE. If we have a circuit where a condenser and coil are connected in series, we can select a frequency for which the inductive reactance will be exactly equal to the capacitive reactance. In such instance, the reactance will be entirely eliminated, and only the resistance of the circuit will be present. Let us see what special frequency will cause the reactive components to disappear and produce *resonance*. This condition requires X_L to equal X_C, so we will place the terms defining these reactances equal to each other:

$$6.28 \times f \times L = \frac{1}{6.28 \times f \times C}$$

where L is in henries, and C is in farads. When we solve this equation for f, we obtain:

$$f = \frac{1}{6.28\sqrt{LC}}$$

CHAPTER SIX

DECIBEL CHART

It is best to calculate the gain or loss in decibels by using a table rather than the exact mathematical formula. To use the table below, first get the ratio of the powers under consideration. If there is a power gain, the ratio will be a number greater than one. If power is lost, the ratio will be a quantity less than one.

If power is increased from 2 watts to 64 watts, the ratio will be 32. Please notice that to obtain the ratio, you divide the output power by the input power. Looking up the gain of 32, you find this corresponds to a gain of 15 DB.

Gain in DB	Power Ratio	Loss in DB	Power Ratio
40	10,000	0	1.
35	3,162	1	.8
30	1,000	2	.6
29	800	3	.5
26	400	4	.4
23	200	5	.32
20	100	6	.25
15	32	7	.2
12	16	8	.16
10	10	9	.12
9	8	10	.1
8	6.3	11	.08
7	5	13	.05
6	4	15	.03
5	3.2	17	.02
4	2.5	20	.01
3	2	25	.003
2	1.6	30	.001
1	1.3	35	.0003
0	1	40	.0001

The transmission unit is employed to express any ratio of power, mechanical loss or gain, etc. related in some way to the auditory sense. The gain in voltage may also be considered in terms of decibels, but the voltages must be considered across equivalent impedances. In case you are considering voltage ratios and use the table above, the answer in decibels must be doubled. For example, a voltage ratio of 100, corresponds to 40 DB (and not 20), and the voltages must be measured across equal impedances.

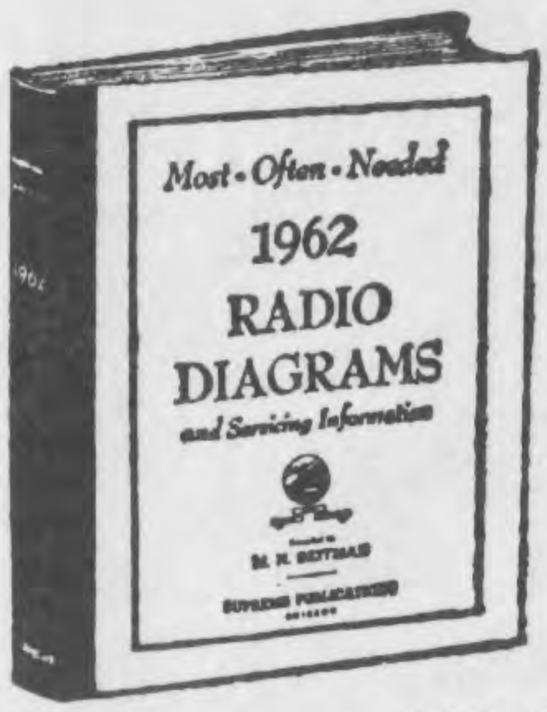

AMAZING OFFER

RADIO & TV SERVICE DATA

Your best, complete source for all needed RADIO and TV diagrams and servicing data. Most amazing values. Only $2.50 and $3 per giant volume. Cover all important makes, models of all periods. Use this entire ad as your *no-risk* order form.

NO-RISK ORDER COUPON

TELEVISION SERVICE MANUALS

Supreme TV manuals are best for faster, easier TV repairs. Lowest priced. Factory data on practically all sets. Complete circuits, all needed alignment facts, wiring board views, waveforms, voltages, production changes, and double-page schematics. Only $3 per large annual manual. Check volumes wanted, send entire advertisement as your order form.

☐ New **1962 Television Servicing** Manual, only **$3.**
☐ **1961 TV** Manual, **$3.** ☐ **1960 TV** Manual, **$3.**
☐ **Additional 1959 TV, $3.** ☐ **Early 1959 TV, $3.**
☐ **1958 TV** Manual, **$3.** ☐ **Additional 1957 TV, $3.**
☐ **Early 1957 Television, $3.** ☐ **1956 TV** Manual, **$3.**
☐ **Additional 1955 TV, $3.** ☐ **Early 1955 TV, $3.**
☐ **1954 TV, $3.** ☐ **1953 TV, $3.** ☐ **1952 TV, $3.**
☐ **1951 TV, $3.** ☐ **Master Index** to all Manuals, **25¢**

RADIO DIAGRAM MANUALS

Here are low-priced radio manuals that simplify repairing. Cover everything from most recent 1962 radios to pre-war old-timers; home radios, stereo, combinations, transistor portables, FM, auto sets. Large schematics, all needed alignment facts, printed boards, voltages, dial stringing, hints. Volumes are big, 8½ x 11", about 190 pages, each.

$2.50

☐ **1962,** ☐ **1961,** ☐ **1960,** ☐ **1959,** ☐ **1958,** ☐ **1957,**
☐ **1956,** ☐ **1955,** ☐ **1954,** ☐ **1953,** ☐ **1952,** ☐ **1951,**
☐ **1950,** ☐ **1949,** ☐ **1948,** ☐ **1947,** ☐ **1946,** ☐ **1942,**
☐ **1941,** ☐ **1940,** ☐ **1926-38, PRICE EACH, $2.50**

SUPREME PUBLICATIONS

1760 Balsam Road Highland Park, ILL.

Rush today **TV** and **Radio** manuals checked in no-risk order form of this ad. Send postpaid, I am enclosing full price. You guarantee my complete satisfaction or my money back.

Name: _____

Address: _____

City: _____ State: _____

Another

SUPREME PUBLICATIONS

Radio Book