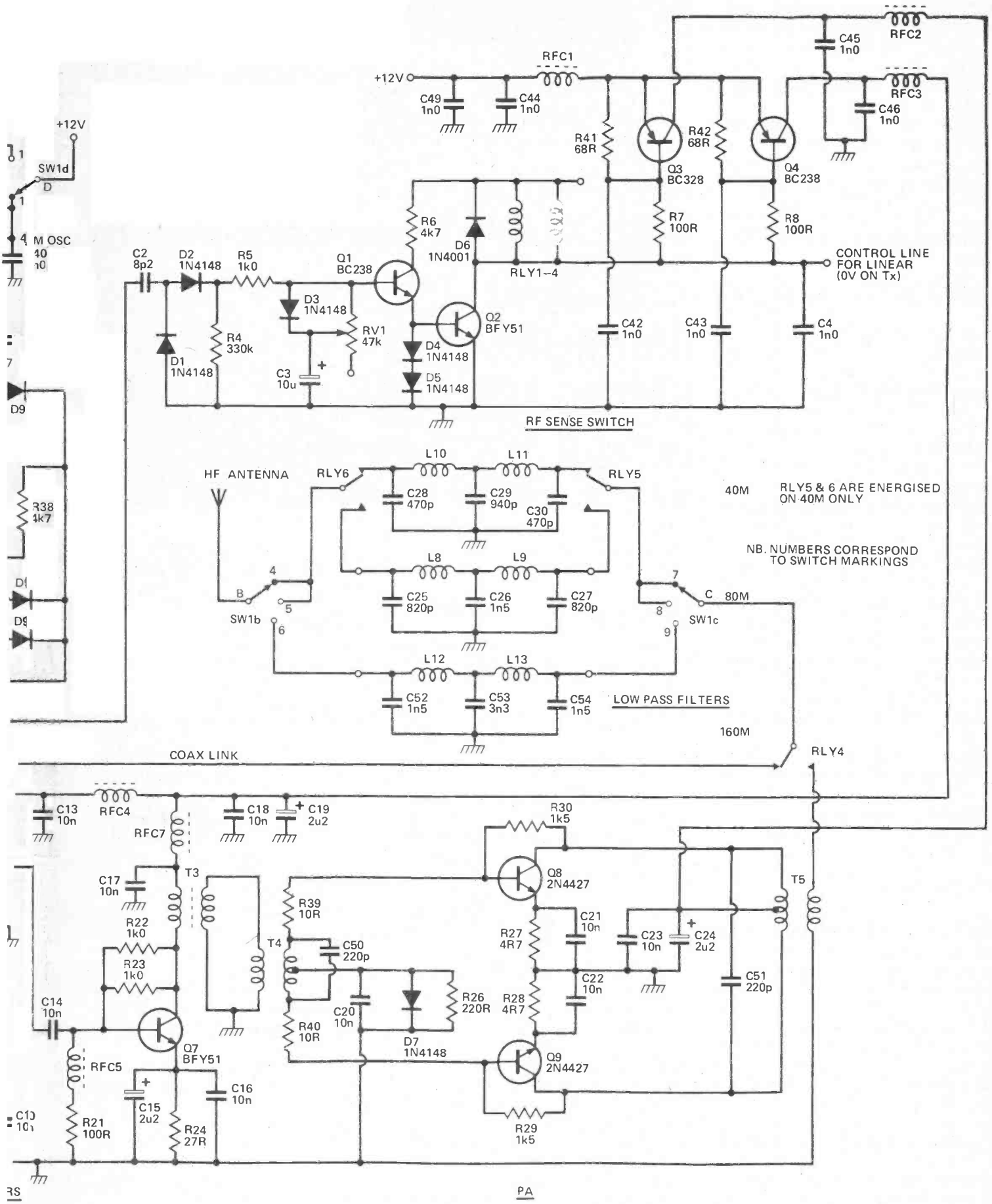Complete circuit diagram of Transverter.